FPG DEW POINT CALIBRATOR

Moisture Analysers · Dew Point Sensors
Chilled Mirrors · Dew Point Hygrometer

Danetech srl
Via Italo Calvino 7
Lotto 1 - Edificio A13-14
20017 Rho (MI)
Tel. +39 02 36569371
info@danetech.it
www.danetech.it

DATA SHEET v 3.1

The World's First Self-Contained Transportable Dew-Frost Point Calibrator

The FPG enables precise test and calibration of dew point sensors, moisture analysers and most types of hygrometer. Compact and transportable, the FPG is suitable for use in the laboratory and on-site.

Primary saturator humidity generator – fundamental precision
Transportable – suitable for use in the laboratory or on-site
Self-contained – no need for external services
-100 … 10°C dew point – covers the working range of most DP instruments
Three configurable probe ports – compatible with all types of dew point probe
Transfer standard sample loop – connection of a reference instrument
Moisture Analyser connection – enables calibration of all types of hygrometer

FPG Applications:

- Industrial calibration laboratories
- Battery production environments
- Transfer standard for intercomparisons
- Heat treatment dew-point calibration
- On-site dew-point sensor calibration
- ISO17025 accredited dew-point calibration
- On-site moisture analyser calibration
- SF6 analyser calibration

Qrometric

FPG
DEW POINT CALIBRATOR

Fundamental Precision

The heart of the FPG is a temperature controlled humidity saturator that generates a stable water vapour pressure (dew point, moisture) within a closed loop. An integrated sample pump maintains a continuous flow through the saturator, the instruments under test and the external sample loop. At equilibrium, the saturator temperature and system pressure resolve a dew point or moisture reference condition to which sensors, probes or analysers can be compared and calibrated.

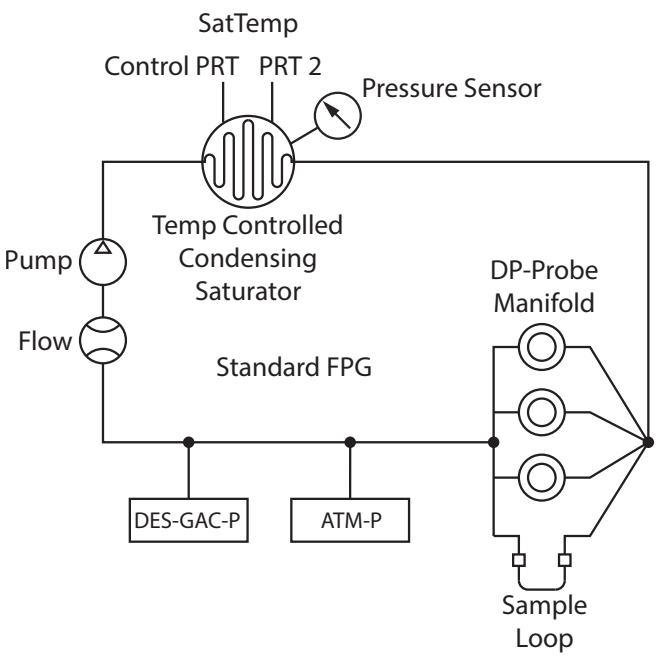

Fast Automated Calibration

FPG can stabilise dew point values in minutes. The recommended calibration process is to start with the lowest dew point, then to step up in fixed increments to the final value. If required, the same points can be easily repeated to establish reproducibility.

Right: typical dew point calibration profile

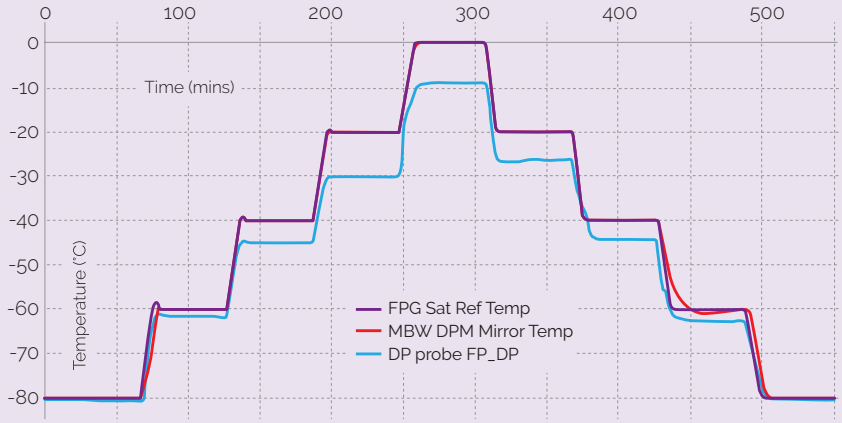

Universal Compatibility

The FPG has been developed to be compatible with all types of humidity and moisture instruments. The front panel probe ports can be easily configured to suit any type of dew point sensor.

External sample loop connections with Swagelok® fittings are included as standard on the back panel, these enable transfer standards or instruments under test to be connected to the FPG.

Probe Port Adapters

To interface dew point sensors (DPS) with the FPG, probe port adapters are available to suit any type of DPS, with metric and imperial threads and variable length. These are electropolished stainless steel with Swagelok® VCR gasket seals, and can be changed by the user when needed.

Qrometric

FPG DEW POINT CALIBRATOR Application Scenarios

FPG was conceived to provide a solution to many humidity calibration scenarios not well resolved by existing calibration technology. The schematics below are three examples of where the FPG enables innovative, precise and practical calibration solutions:

Calibrate up to three Dew Point Sensors with the FPG as the generator and reference:

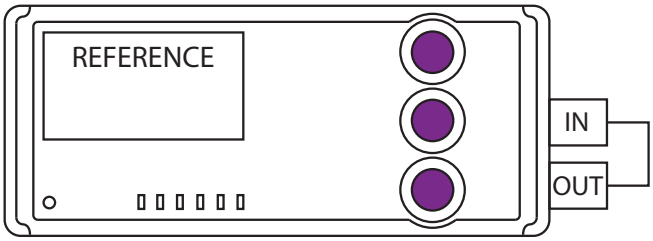

Calibrate a hygrometer with the FPG as the generator and a dew point mirror as the reference:

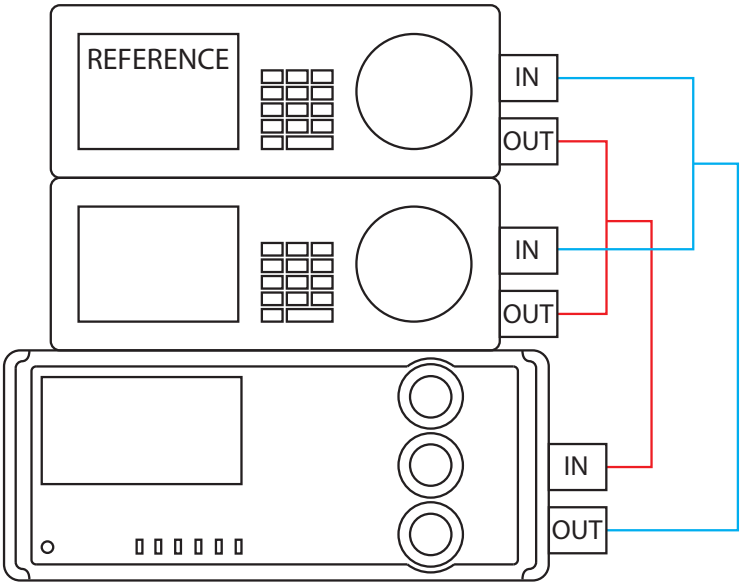

Calibrate up to three Dew Point Sensors with the FPG as the generator and a dew point mirror as the reference:

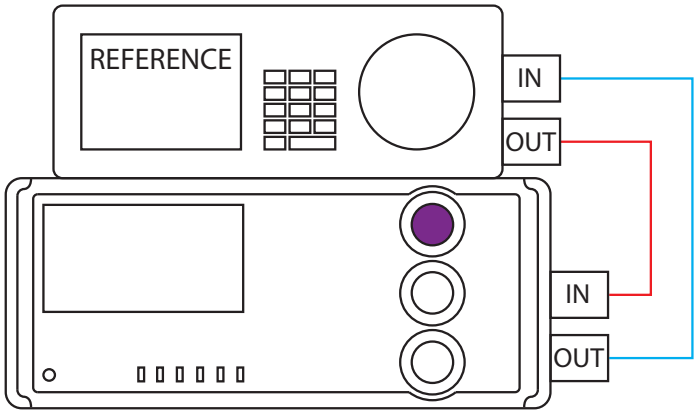

Uncertainty Defined

Accredited calibration is always based on an uncertainty budget that can be audited by an assessor. An uncertainty framework has been developed in collaboration with the NPL so that users can quickly calculate and document the calibration uncertainty, with or without the use of a transfer standard.

Temperature Measurement

The FPG saturator includes two positions for Pt100Ω temperature sensors (PRT). One is used for measurement and control with the embedded control system, the second PRT can be connected to an external bridge for independent verification of the saturator temperature, and can be used to calibrate the control PRT.

Flow Measurement and Control

The FPG sample loop includes a mass flow sensor and variable speed sample pump so the user can set and monitor the flow rate. Adjustable flow rates can also be used to accelerate stabilisation times, evaluate instrument response characteristics and desorption effects.

Embedded PC

The FPG control system is based on an embedded PC with an SSD and a touchscreen user interface. USB peripherals, such as keyboard and mouse, can be connected through the integrated USB hub. Third-party solutions such as Calibry metrology software or manufacturer probe calibration software are available to work in conjunction with the FPG.

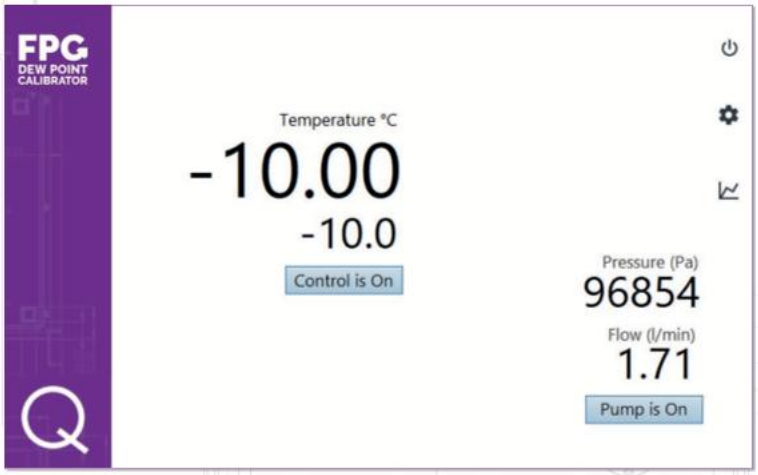

Pressure Measurement

Dew point is pressure dependent, so its measurement is fundamental to the FPG operation and the generated dew-frost point. Precise pressure measurement is included within the sampling system and the value is displayed on the front panel along with the dew-frost point.

Purge Features

FPG incorporates two purge features that optimise operational performance:

DES-GAC-P

To optimise dry down times, this feature uses desiccant to remove water from the sample loop, particularly when probes and sample tubes may be wet. The integrated purge cell also includes granular activated carbon, which, in combination with the desiccant absorbs any contaminants in the system.

ATM-P

If there is not enough water vapour in the system to maintain higher dew point values, the ATM-P feature introduces water vapour into the sample loop through an inlet filter.

API included as standard

FPG has a standard API feature which is a text based remote command interface connected through the FPG's ethernet port. The FPG's data can be captured and set points defined using custom scripts or third-party software such as Calibry, RHS Control or Gecko R2.

Transfer Standard

The fundamental physics at the heart of the FPG means it can be used for calibration without the need for a transfer standard hygrometer. However, in a similar way to temperature calibration, a reference instrument can be used to improve confidence and reduce uncertainty. For this purpose, the FPG includes external sample loop fittings so the user can validate performance at any time by connecting a reference instrument such as a dew point mirror.

PPMV – Mole Fraction

FPG includes the option to display the calculated water vapour mol fraction from the saturator and pressure data.

SPECIFICATIONS:

Model	Range	Accuracy [1]	FP-DP Stability [2]	SatTemp Stability [3]
FPG-60	**-60 … 10 ˚C**	**±0.1 ˚C**	**±0.01 ˚C**	**≤ ±0.01 ˚C**
FPG-80	**-80 … 10 ˚C**	**±0.2…0.1 ˚C**	**±0.01 ˚C**	**≤ ±0.01 ˚C**
FPG-100	**-100 … 10 ˚C**	**±0.5…0.1 ˚C**	**±0.01 ˚C**	**≤ ±0.01 ˚C**
Sample Flow rate	**2 … 4.5 LPM**			
System Pressure	**800 … 1200 hPa**	**0.1%**		

1 – Accuracy of generated frost-dew point condition within the system

2 – Stability of the generated frost-dew point condition at equilibrium, in laboratory conditions ± 2˚C, as measured with a reference chilled mirror hygrometer on the sample loop over a ten minute interval, standard deviation ≤ 0.01

3 – Stability of the saturator temperature at equilibrium, in laboratory conditions ± 2 ˚C, as measured with an external PRT in the rear port over a ten minute interval, standard deviation ≤ 0.01

Generator type	Dew-frost point, condensation saturator, closed-loop flow
Flow system	Internal pump
Purge functions	Filtered atmospheric, desiccant/granular activated carbon
Response times	90 minutes, ambient to -100 ˚C saturator temperature
SatTemp stabilisation time	20 minutes, 20 ˚C set point change
SatTemp repeatability	± 0.03 ˚C
SatTemp control stability	≤ ± 0.01 ˚C
Reproducibility FP-DP	± 0.05 ˚C
Long term stability	≤ ± 0.05 ˚C
Displayed parameters	Saturator temperature, pressure, flow, calculated mole fraction
DP Probe adapters	316 Stainless steel, Nitrile O rings, 3 x FPG-PA0 included
DP Probe fittings	User interchangeable probe adapters: G ½", UNF, NPT, M14
Sample loop connections	100 Swagelok® VCR
User interface	7" Touchscreen LED
External monitor interface	HDMI
Interface	API via Ethernet
Power	100…230 VAC 50/60 Hz, 5A Max
Case material	Aluminium, powder coated
Environmental Conditions	Operating environment 15…30 ˚C, 20…75 %rh Storage environment 0…50 ˚C, <95 %rh non-condensing

Dimensions and **weights**

FPG – 60/80/100	W450 x D300 x H180 mm — 23 kg
FPG – in box (with soft bag)	W580 x D580 x H300 mm — 28 kg
FPG – in transport case	W670 x D670 x H400 mm — 38 kg

FPG
DEW POINT CALIBRATOR

The world's first self-contained transportable dew-frost point calibrator

ORDERING INFORMATION	
FPG Model:	**order code:**
FPG Transportable dew-frost point calibrator, -60...10 °C Factory calibration -60, -40, -20, + 1, 10 °C FP-DP	Q-FPG-60
FPG Transportable dew-frost point calibrator, -80...10 °C Factory calibration -80, -75, -60, -40, -20, + 1, 10 °C FP-DP	Q-FPG-80
FPG Transportable dew-frost point calibrator, -100...10 °C Factory calibration -90, -75, -60, -40, -20, + 1, 10 °C FP-DP	Q-FPG-100
Dew point probe adapters (each includes 1 x front manifold VCR gasket)	
FPG probe port cap	FPG-PA0
FPG G ½" probe adapter 25 to 50 mm	FPG-PA1
FPG 5/8 UNF probe adapter 25 to 50 mm	FPG-PA2
FPG 3/4 UNF probe adapter 45 to 70 mm	FPG-PA3
FPG NPT ½" probe adapter 20 to 40 mm	FPG-PA4
FPG M14 x 1.25mm pitch probe adapter 55 to 80 mm	FPG-PA5
FPG G ½" thread (long) probe adapter 50 to 70 mm	FPG-PA6
Calibration	
FPG saturator second PRT, incl. Lemo connector, coefficents, ISO17025 calibration certificate	FPG-PRT2
ISO17025 accredited FPG calibration upgrade -75, -60, -40, -20, + 1, 10 °C	FPG-ISO-CAL-UP
FP-DP ISO17025 accredited FPG calibration -75, -60, -40, -20, + 1, 10 °C FP-DP	FPG-ISO-CAL
Factory service and ISO17025 accredited calibration, 6 points	FPG- FS-TCAL
Transport, spares and additonal options	
Transport bag, soft padded	FPG-TB
Transport case, suitable for air freight	FPG-TC
Rear panel VCR to 6mm Swagelok® adaptor	SS-4-WVCR-6-6M0
Rear panel VCR to ¼" Swagelok® adaptor	SS-4-WVCR-6-400
FPG standard supply scope FPG, 3x PA-0, torque driver, USB card drive including user manual, factory calibration certificate, power cable	–

Qrometric

www.qrometric.com — +44 (0) 207 099 5807 — info@qrometric.com